Ribes

SOFAS

2019

Antonio Citterio

Description

Ribes is a modular seating system that focuses on versatility, customisation, colour and research into materials. Sofas, central and end elements, chaise longues and ottomans all come in a huge variety of shapes and sizes that lend themselves to being arranged in an outdoor space according to personal taste thanks to the exceptional versatility of the modular components and the availability of a vast rage of covers and finishes. The starting point is a futon base with flexible glass fibre slats resting on an aluminium frame to which two types of armrest or backrest can be attached as desired: one with a polypropylene fibre interlacing, the other with a roller cushion. On top are seat cushions intended as comfortable mattresses to stretch out on and several shapes of back and armrest cushion, all containing a new upholstery giving Ribes a particularly lived-in and soft look. Because it is so versatile, Ribes can also be reconfigured over time by adding new elements, as well as by altering the functional use of existing ones. By substituting, adding or varying the position of the back and armrests, a sommier can turn into a vis-à-vis sofa, a sofa can become an island, and a corner seating plan can transform into a comfortable bed. Ribes means transformation and is especially suited to those areas that are neither inside nor outside: verandas, shady patios, under a loggia or on a covered terrace, allowing a fluid approach to the open spaces in the home.

Technical information

Frame
die-cast aluminium and extrusions with polyester powder painting
Back and roller upholstery
polyester fiber recycled from PET, cover in water repellent polyester fibre
Seat upholstery
shaped polyurethane, polyester fiber recycled from PET, cover in water repellent polyester fibre
Interlacing
polypropylene fibre braid
Seat slats
glass fibre
Seat top section
solid wood
Ferrules
thermoplastic material
Waterproof cover cloth
PES fabric coated on one side in PU
Cover
fabric in limited categories (with profile)

Technical drawings

RB212

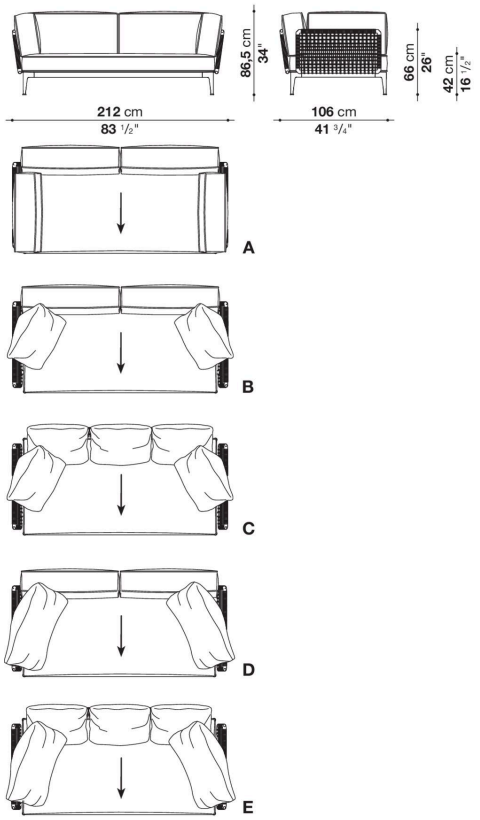

RBR220

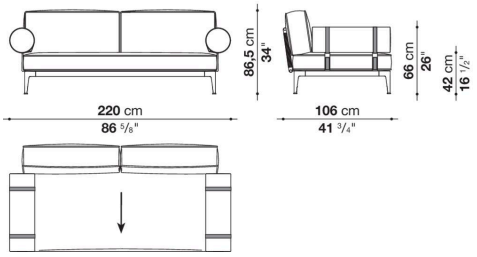

RB248

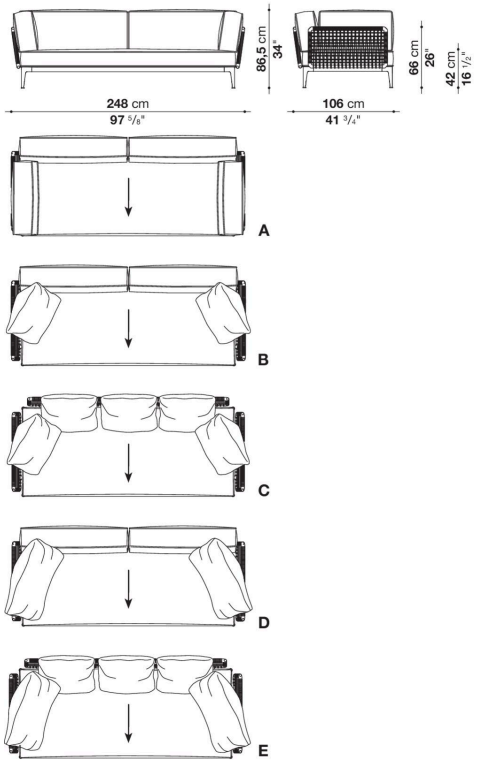

RBR256

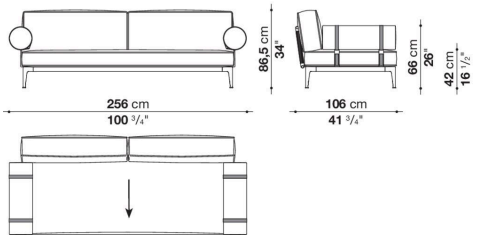

RB190C

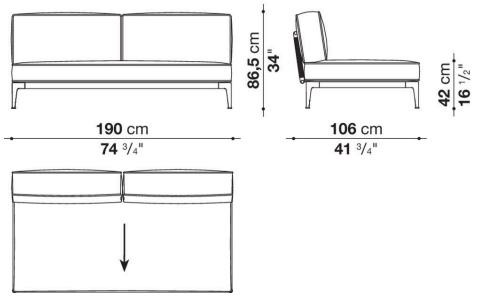

RBR190C

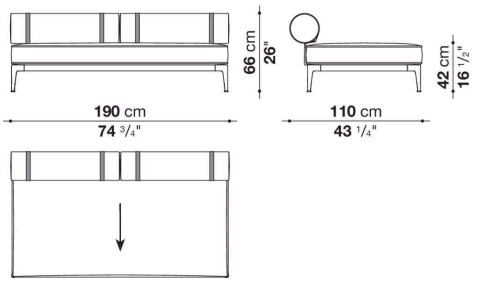

RB190PA_1

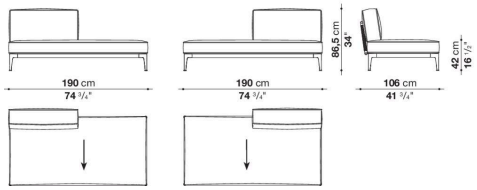

RBR190PA

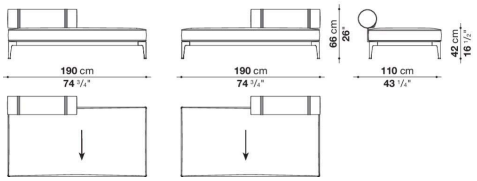

RB190PA_2

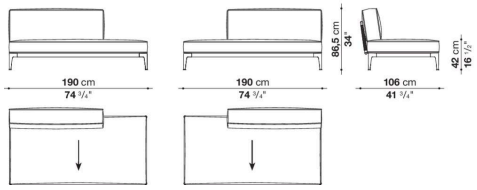

RB190PA_3

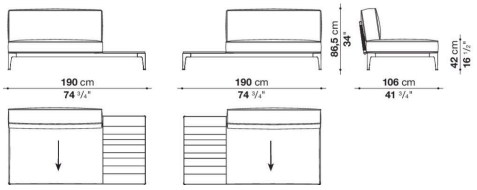

RB201T_1

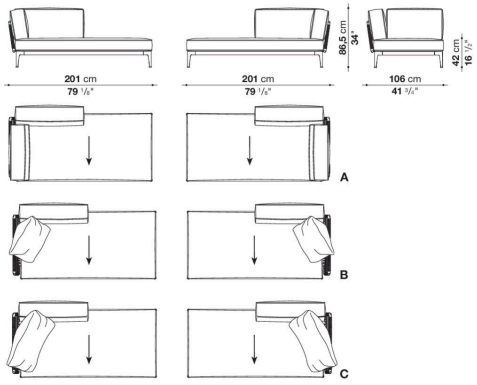

RBR205T_1

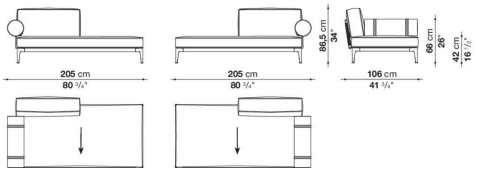

RB201T_2

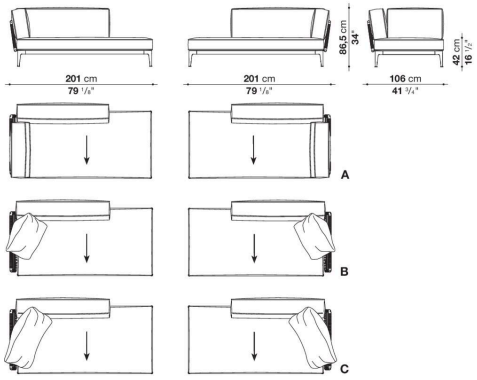

RB201T_4

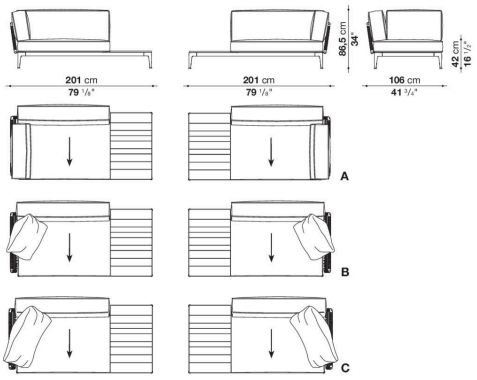

RBR205T_2

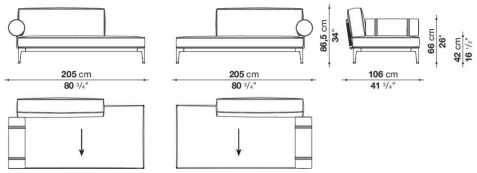

RBR205T_5

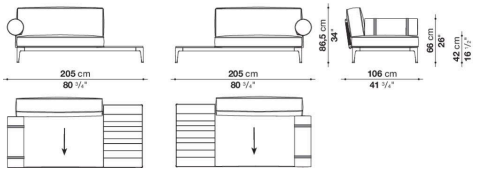

RB201T_3

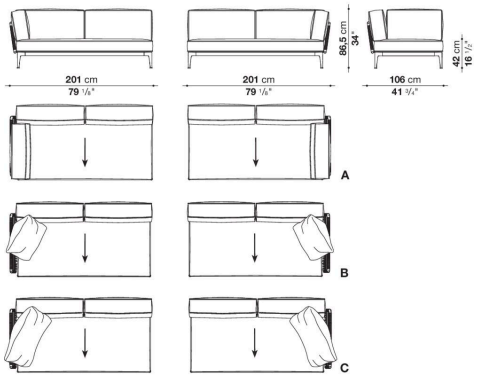

RBR205T_3

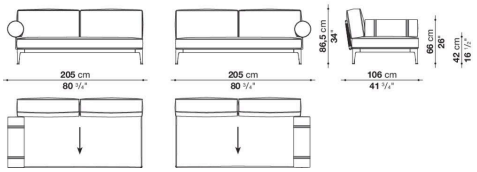

RBR205T_4

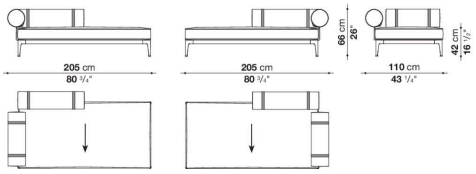

RB141L_1

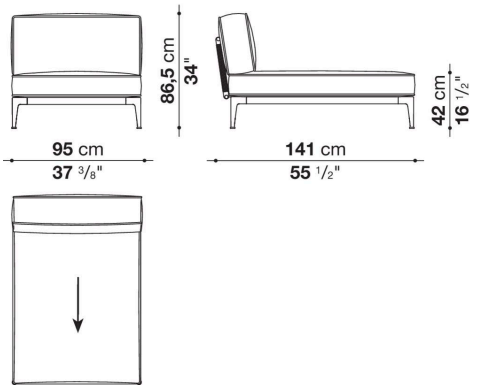

RBR145L

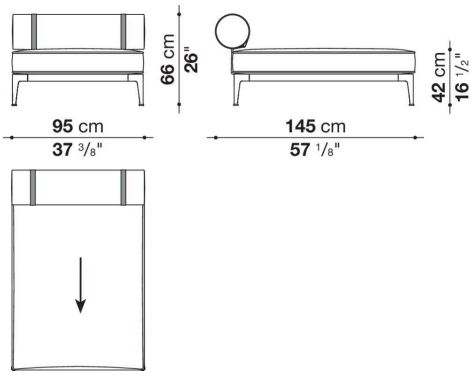

RB141L_2

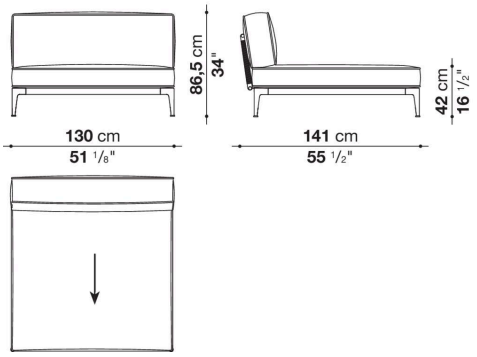

RB141L_3

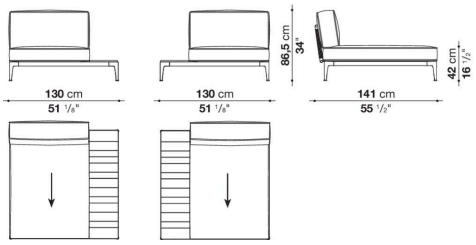

RB201L

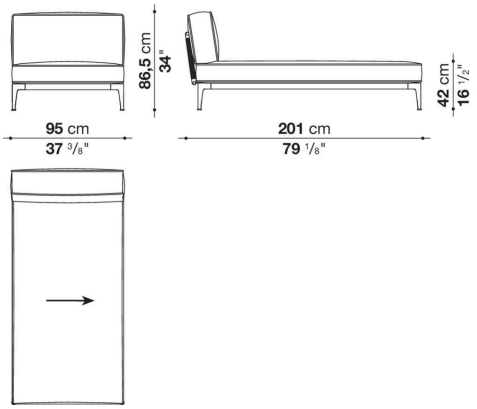

RBR205L

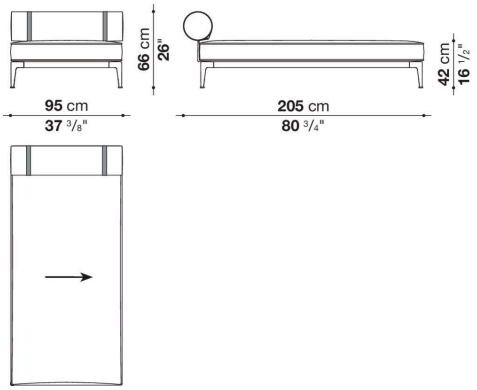

RB141LB_1

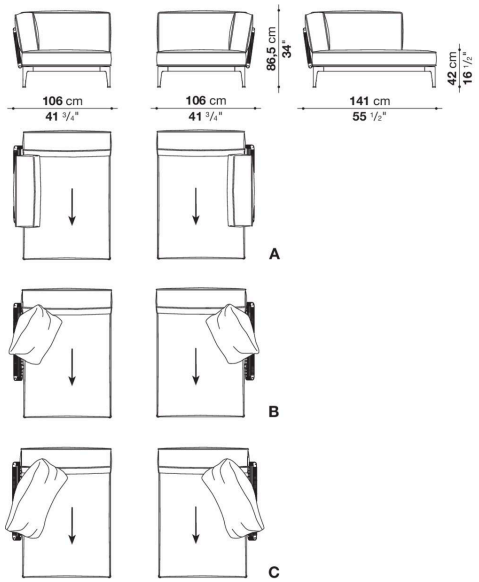

RBR141LB_1

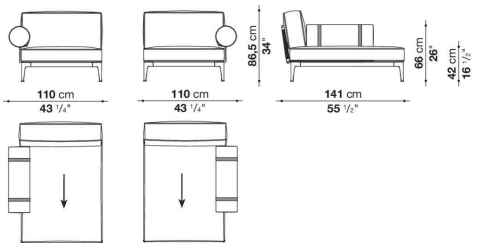

RBR145LB_1

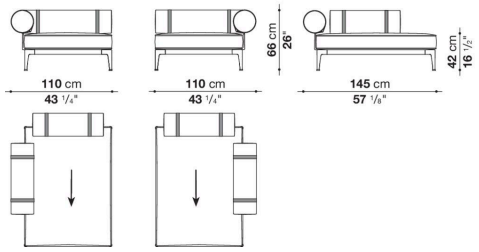

RB141LB_3

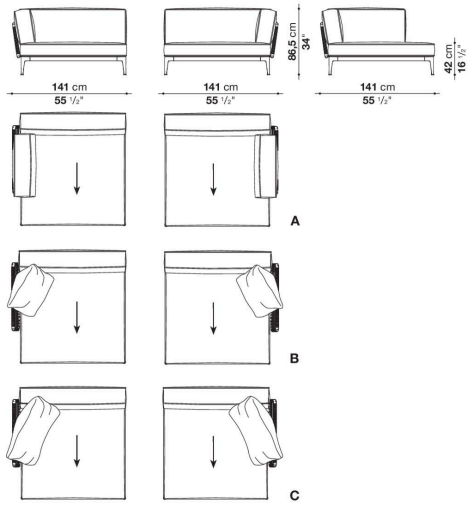

RB141LB_5

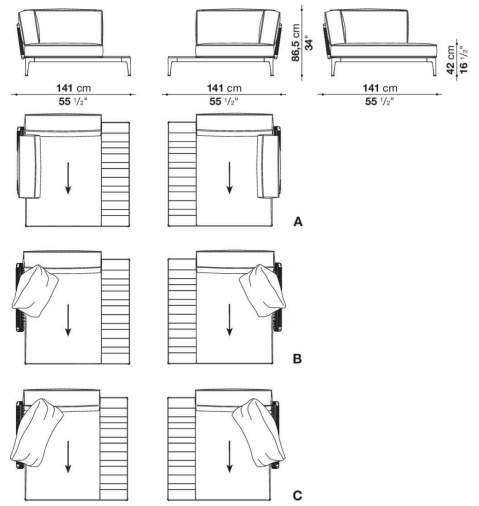

RBR141LB_2

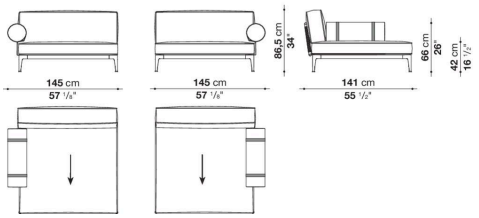

RBR141LB_3

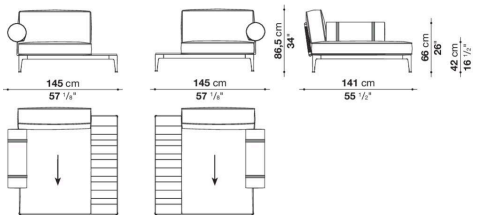

RBR145LB_2

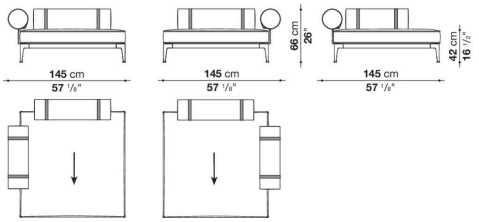

RB201LB_1

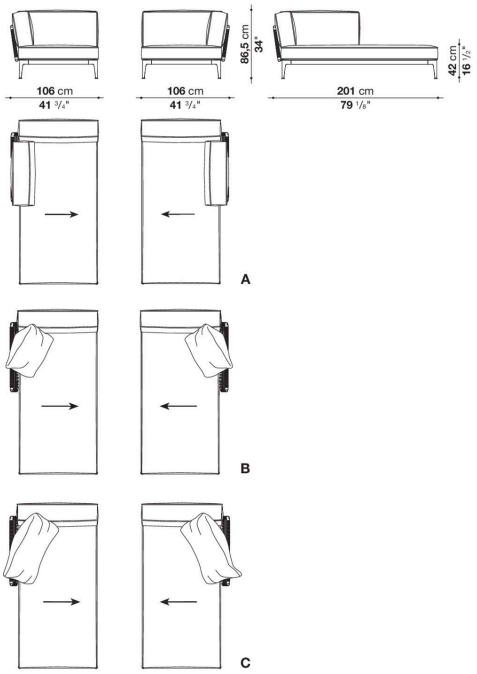

RBR201LB

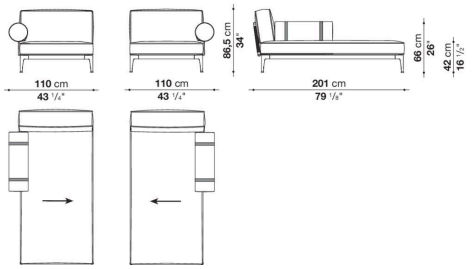

RB201LB_3

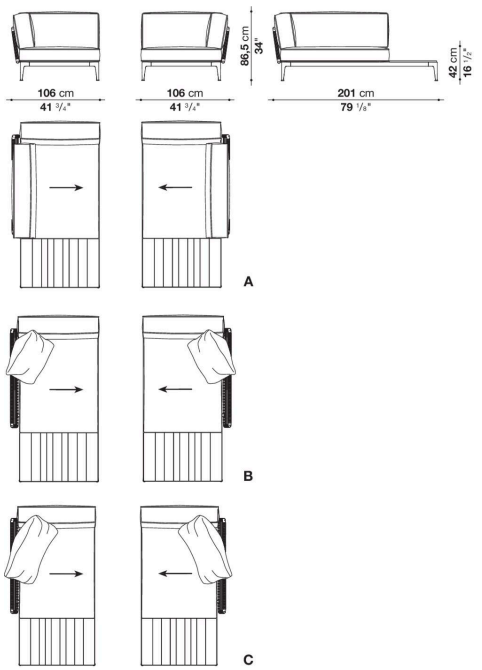

RB201LB_2

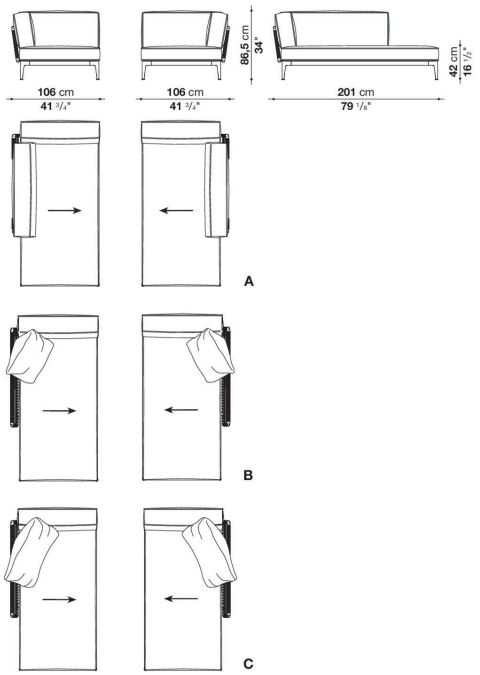

RB141LB_2

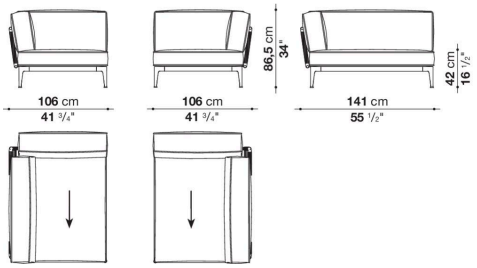

RB141LB_4

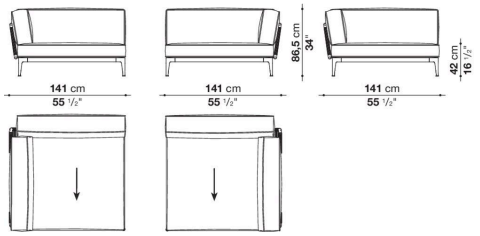

RB141LB_6

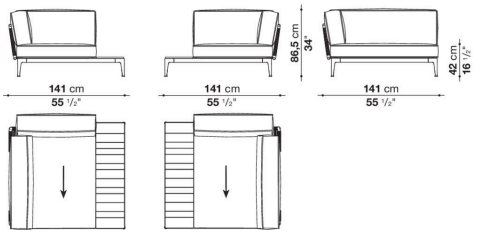

RB130P_1

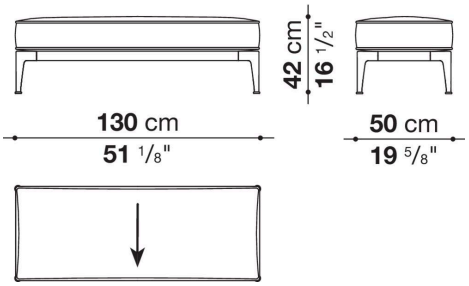

RB130P_2

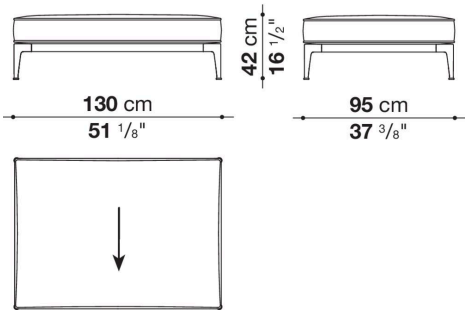

RB130PQ

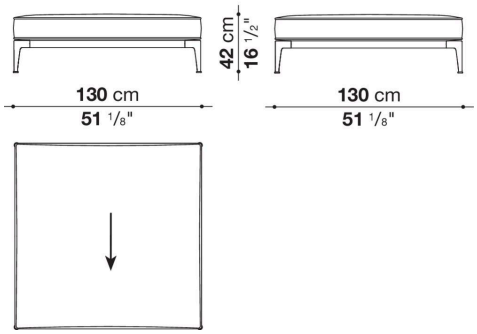

RB130PQ_1

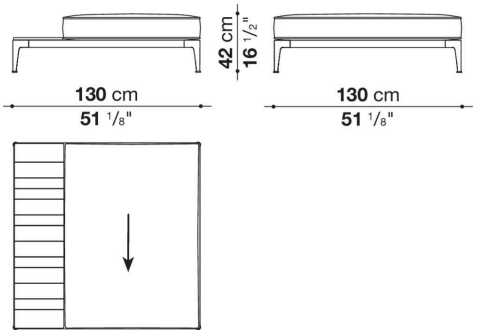

RB190P

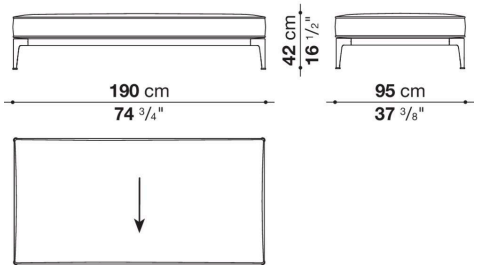
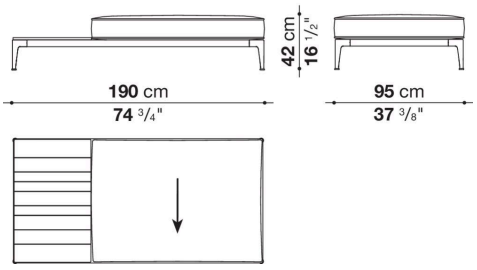
RB190P_1